ABLOY® EL560, EL561, EL562, EL563

High security DIN standard handle controlled lock for wooden and metal doors

Product description
High security locks EL560/561/562/563 are used especially in situations where the advantages of handle-controlled unlocking have to be combined with the mechanical security requirements. The integrated monitoring contacts from the lock can be connected to the different systems.

When door closes, dead bolt is thrown out automatically, double action latch is blocked and the lock case is secured in two points.

The exit side settings (EL560/562) and selecting between fail-locked and fail-unlocked can be performed on the lock as required.

EL560/562 with split spindle function
Outside handle is engaged electrically, e.g. by electric access control. By pressing engaged handle, dead bolt is retracted and double action latch released.

Inside handle opens lock mechanically (exit function), no need for electric control.

EL561/563 with straight spindle function
Both handles are engaged electrically e.g. by electric access control. By pressing engaged handles, dead bolt is retracted and double action latch released.

Overview of Advantages
- Mechanical automatic locking system
- Non handed, left / right
- Exit side can be changed over *
- Can be changed between fail-unlocked & fail-locked
- Burglary-resistant due to dead bolt with 20 mm throw
- Exit function by inside handle *
- Suitable for fire doors
- Controllable outside handle *
- Mechanical override with cylinder
- Monitoring functions
    - Door status
    - Handle down
    - Bolt deadlocked
    - Bolt in
    - Key cylinder used
    - Sabotage loop

* EL560/EL562

Scope of delivery
- 1 pcs lock case
- Operating manual

Ordered separately
- Strike plate (e.g. EA324)
- Cable EA218 (6m) / EA219 (10m)
- Lead cover EA280/281
- Handle set (e.g. EH006/042) and spindle
    - Split spindle EA288/289 with EL560/562
- Cylinder(s) (e.g. CY321T)

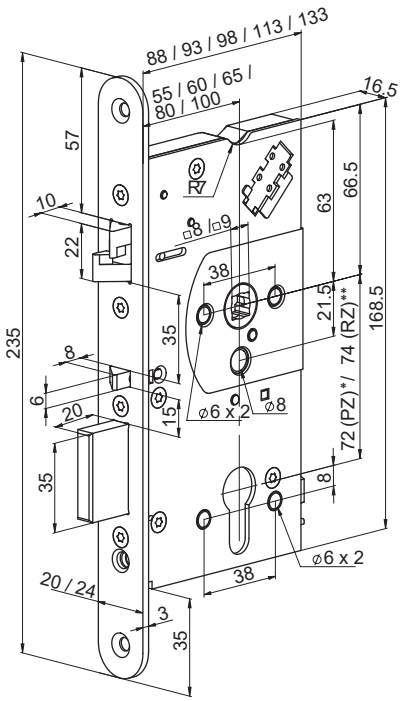

* EL560/561
** EL562/563

Technical data

Handing	Non-handed, left/right
Exit function	Yes (EL560/562)
Mechanical cylinder override	Yes
Latch	Double action latch
Dead bolt	Yes, 20mm
Input operating voltage	12-24 VDC
Rated current consumption	12 V DC idle 240 mA, max. 550 mA 24 V DC idle 130 mA, max. 300 mA
Microswitch capacity (monitoring contacts)	Max. 0.5 A 30 V AC/DC resist.10 W
Suitable for fire doors	Yes
EN14846:2008	3S8D-L611
EN179:2008	376B1342AB (EL560/562)
EN1125:2008	376B1321AB (EL560/562)

We reserve the right to make alterations to the products described in this leaflet.